Metal Switch, Switching Voltage up to 250 VAC

Point Illumination
red

Ring illumination
blue

Ring illumination
green
Ring dotted

See below:
Approvals and Compliances

Description

- Mechanical switch with stroke MO (Momentary)
- Single-/ or multicolor illumination
- With torsion protection for easier positioning
- Equipped with quick connect terminals to permit fast connection
- Protection class IP67 frontside

Unique Selling Proposition

- Attractive tactile feedback
- High quality materials
- Long life span
- Color marking

Characteristics

- Housing material in high-quality stainless steel or aluminium
- Variety of design options regarding size, colour, illumination, connection or lettering
- Switching voltage from 30 VDC to 250 VAC
  Switching current from 0.1 A to 10 A
- Actuator: aluminium/ stainless steel/ ceramics
- For use in harsh environments

References

Other versions on request
Last order date: 31.01.2024
Last delivery date: 30.11.2024

Weblinks

pdf data sheet, html datasheet, General Product Information, CAD-Drawings, Product News, Detailed request for product

Technical Data

Electrical Data	
Supply Voltage LED	see table of variants
Micro Switch	see details in table 'Micro Switch'
Impulse Withstand Voltage (ESD)	2 kV
Mechanical Data	
Actuating Force	4.5 N
Actuating Travel	1.0 mm
Lifetime	1.5 million actuations
Shock Protection	IK07 to IK10
Mounting screw torque Plastic Nut	max. 3.5 Nm

Climatical Data	
Operating Temperature	-25 to 85 °C
Storage Temperature	-25 to 85 °C
Protection Class	Rear Mounting
Salt Spray Test (acc. to IEC 60068-2-11)	24 h / 48 h / 96 h Residence Time
Material	
Housing	Aluminium / Stainless Steel
Actuator	Aluminium / Stainless Steel / Ceramics
Seal Ring	NBR70
Plastic Nut	PA, UL94

Approvals and Compliances

Detailed information on product approvals, code requirements, usage instructions and detailed test conditions can be looked up in Details about Approvals

SCHURTER products are designed for use in industrial environments. They have approvals from independent testing bodies according to national and international standards. Products with specific characteristics and requirements such as required in the automotive sector according to IATF 16949, medical technology according to ISO 13485 or in the aerospace industry can be offered exclusively with customer-specific, individual agreements by SCHURTER.

PHASE OUT

Compliances

The product complies with following Guide Lines

Identification	Details	Initiator	Description
CE	CE declaration of conformity	SCHURTER AG	The CE marking declares that the product complies with the applicable requirements laid down in the harmonisation of Community legislation on its affixing in accordance with EU Regulation 765/2008.
UK CA	UKCA declaration of conformity	SCHURTER AG	The UKCA marking declares that the product complies with the applicable requirements laid down in the British Amendment of Regulation (EC) 765/2008.
RoHS	RoHS	SCHURTER AG	Directive RoHS 2011/65/EU, Amendment (EU) 2015/863
REACH	REACH	SCHURTER AG	On 1 June 2007, Regulation (EC) No 1907/2006 on the Registration, Evaluation, Authorization and Restriction of Chemicals 1 (abbreviated as "REACH") entered into force.

Dimension [mm]

MSM MO Al double-pole

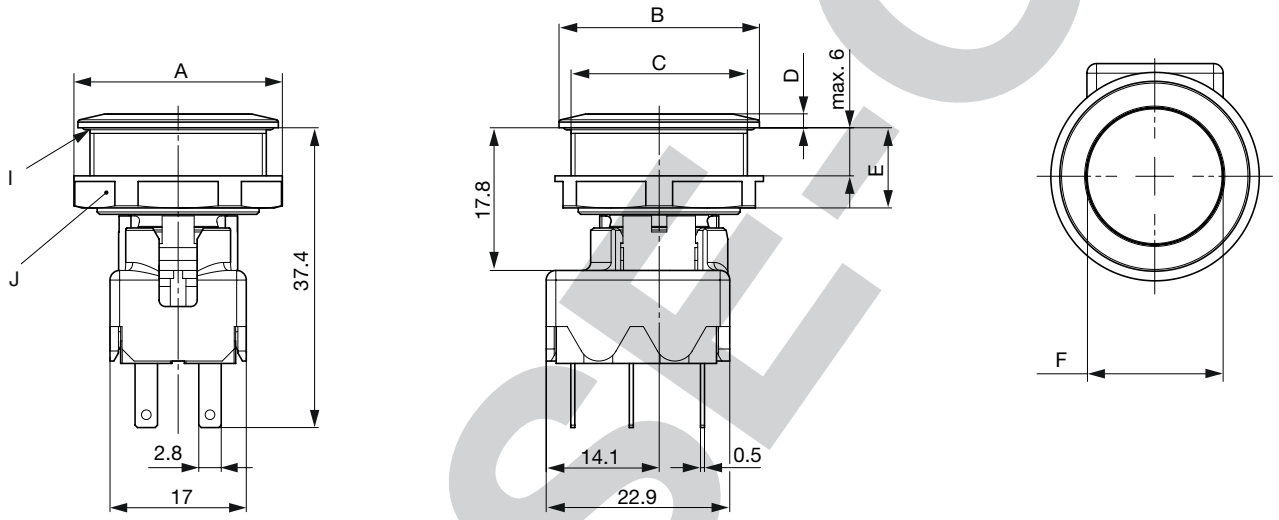

PHASE OUT

MSM MO RI single-pole

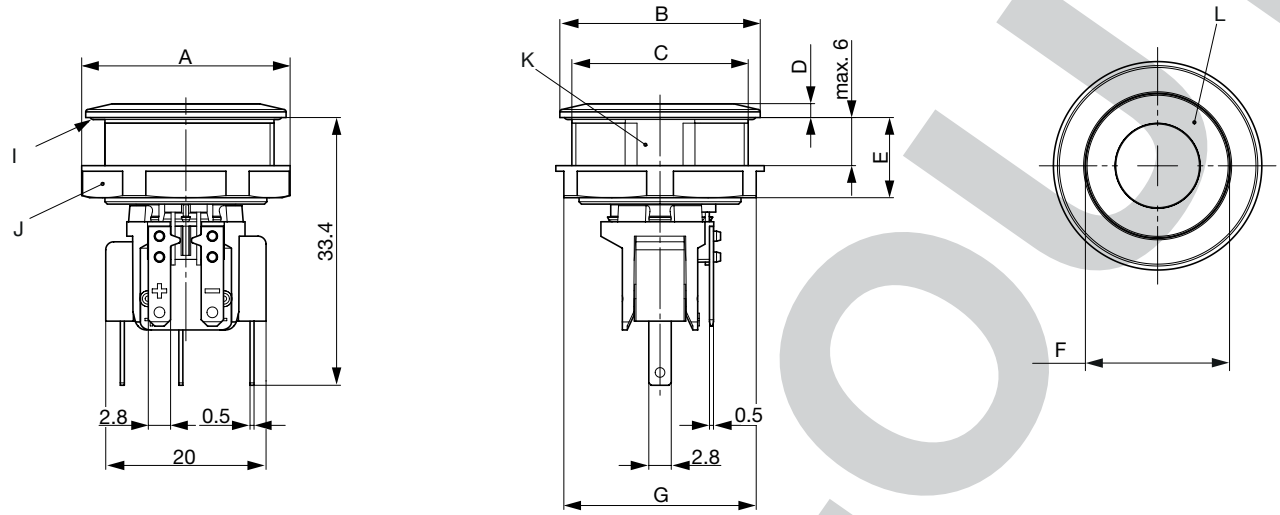

MSM MO RI double-pole

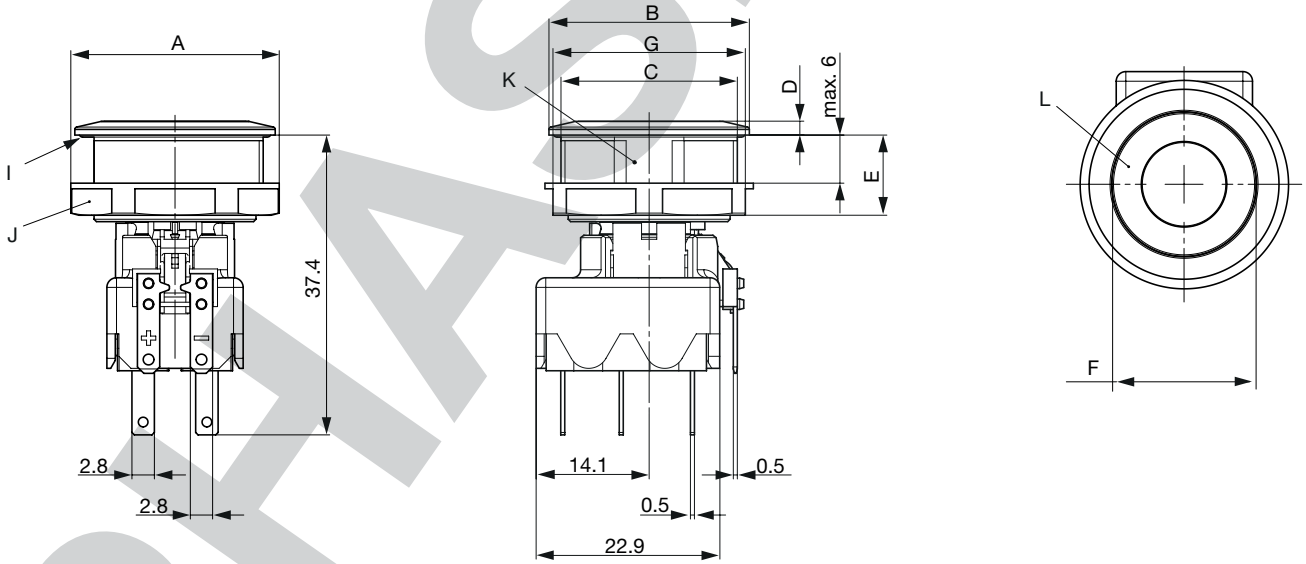

PHASE-OUT

MSM MO PI single-pole

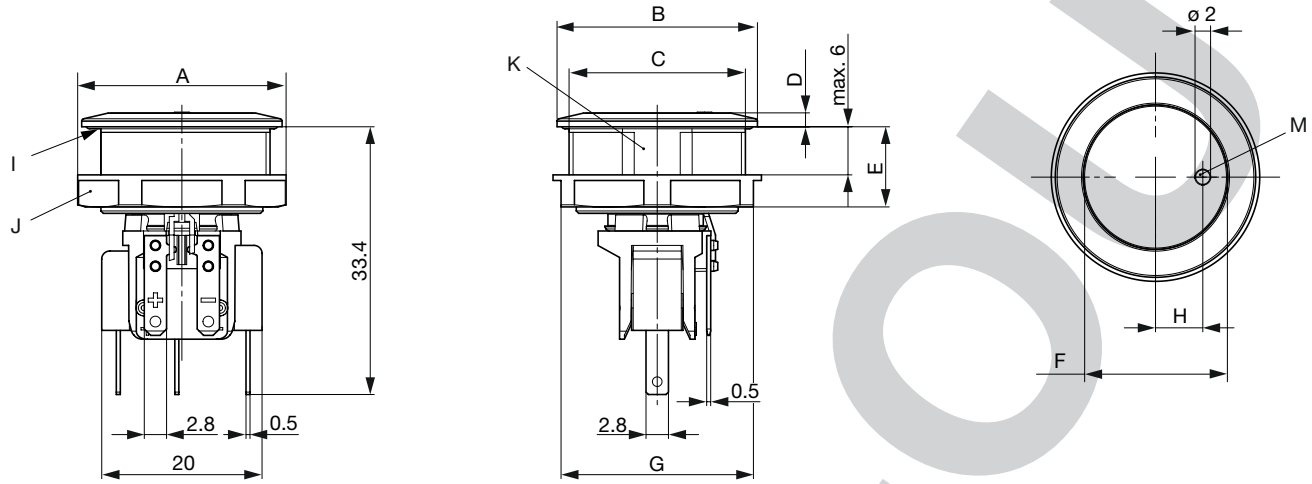

MSM MO PI double-pole

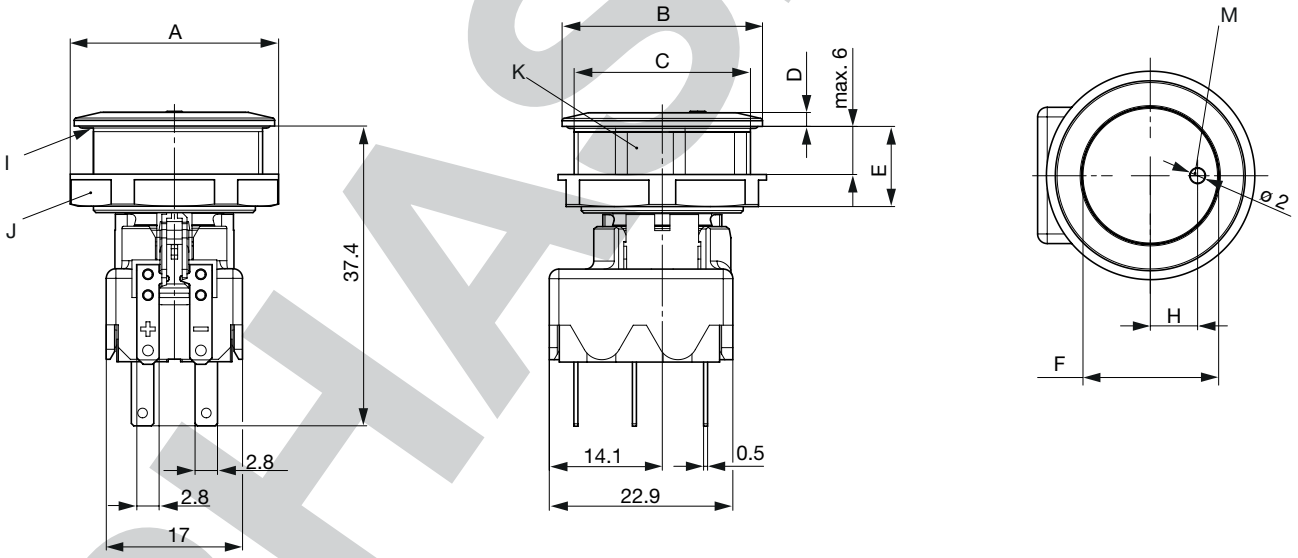

PHASE-OUT

Legend to MSM Momentary

Diameter in mm	16	19	22	30
A	20	24	26	24.5
B	19	22	25	34
C	M16x1	M19x0.75	M22x1	M30x1.5
D	1.74	1.75	1.74	2.04
E	10	10.5	10	11
F Operating area / illumination area	12.8	15.8	18	25
G	AF19	AF22	AF24	AF32
H	-	5.9	5.9	7.9
I	O-Ring			
J	Nut			
K	Anti-rotation lock			
L	Lighting ring			
M	Point illumination			

Tolerance Range

Actuator Tolerance Range

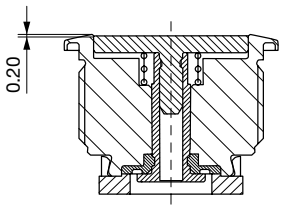

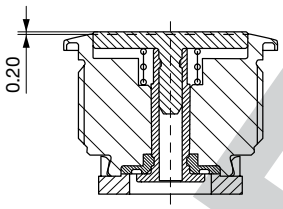

The mounting tolerance range of the actuator varies from 0.2 mm projection length and 0.2 mm short length to the housing edge. The slanting position of the actuator can range within this tolerance.

Dimension

All illuminated products and all non illuminated push buttons with symbols are supplied with anti-rotation protection

Non-illuminated push-buttons are supplied without anti-rotation protection

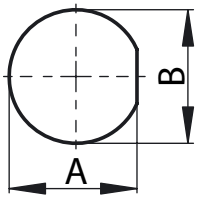

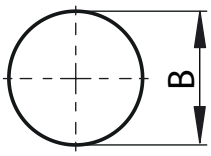

Diameter (mm)	A	B
16	15.15+0.05	16.1 +0.1
19	18.15+0.05	19.1 +0.1
22	21.15+0.05	22.1 +0.1
30	28.85+0.05	30.1 +0.1

PHASE-OUT

Assembly Instructions

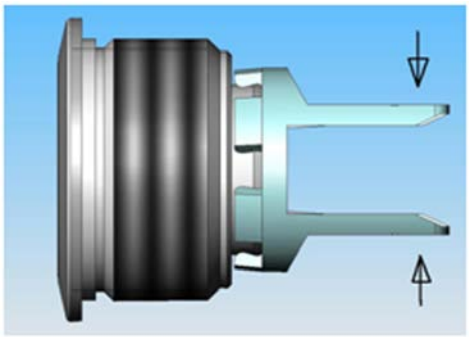

During assembly, the protruding bars of the holder should not be pressed together.

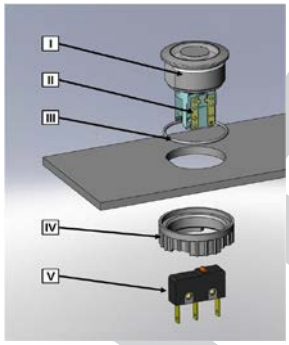

I Housing
II Flat Pin Terminal (Illumination)
III O-Ring gasket
IV Nut (Nut type see Dimensions)
V Module Switching Contact

Installation Instruction:
1. Place the gasket accurately on the actuator housing. Then mount the actuator housing assembly into the panel.
2. Tighten the screw nut according to the torque instructions.
3. Clasp the module switching contact into the micro switch holder of the actuator housing.

Installation information:
- The power supply and the configuration of the flat pin terminals have to be installed correctly for the illumination and micro switch function.
- Insulate the terminals as required. Fully insulated plug-in sleeves are recommended.
- Installation instructions according to VDE-standard DIN VDE 0100-100 or alternatively IEC 60354 standard.
- During assembly, the protruding bars of the holder should not be pressed together.

PHASE-OUT

Diagrams

Point Illumination single-pole

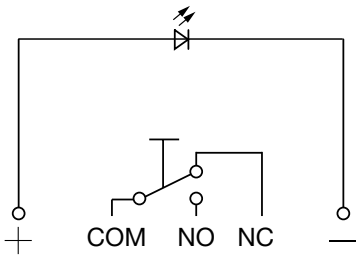

Area illumination single-pole

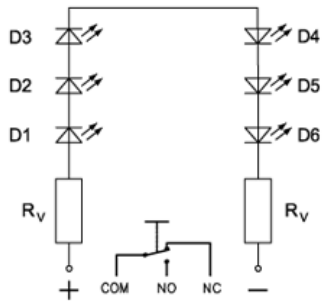

Point illumination double-pole

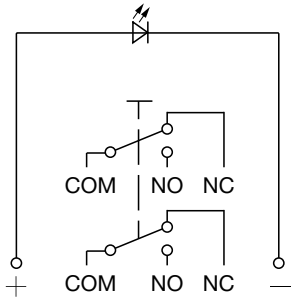

Ring illumination double-pole

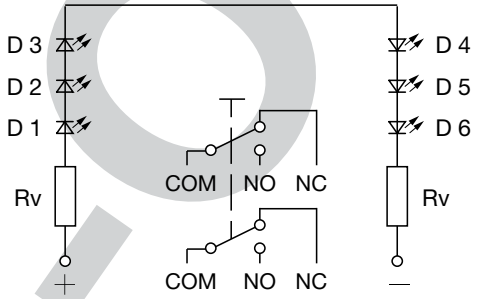

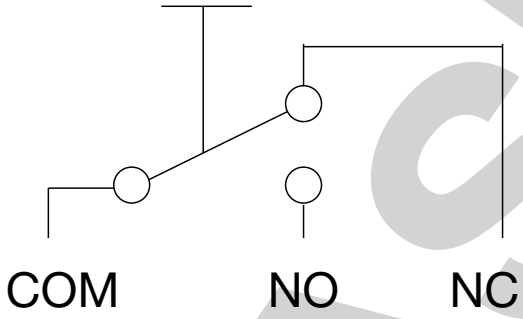

Illumination options for RGB

Lighting type	Wire red	Wire green	Wire blue	Resulting Color
Multicolor Singlecolor	x			Red
Multicolor Singlecolor		x		Green
Multicolor Singlecolor			x	Blue
Multicolor RGB Additive 2	x	x		Yellow
Multicolor RGB Additive 2	x		x	Magenta
Multicolor RGB Additive 2		x	x	Cyan
Multicolor RGB Additive 3	x	x	x	White

Point Illumination

Operating Data	Forward Current max.	Forward Voltage at 10 mA	Forward Voltage max.
LED red	30 mA	1.9 VDC	3.0 VDC
LED green	30 mA	2.4 VDC	3.0 VDC
LED yellow	30 mA	2.4 VDC	3.0 VDC
LED blue	20 mA	3.8 VDC	4.5 VDC
LED red/green	25 mA	2.0 VDC	2.5 VDC
Attention: Switches with point illumination (PI) are delivered without series resistor.			

PHASE-OUT

Micro Switch

Micro Switch	Contact Material	Switching Voltage	Switching current	Rated Switching Capacity	Lifetime	Contact Resistance	Insulation Resistance	Duration of Bounce
0.1 A, IP40	Au	max. 30 VDC	max. 0.1 A	3 W	0.2 Mio.	< 50 mΩ	> 100 MΩ	< 5 ms
0.1 A, IP67		max. 30 VDC	max. 0.1 A	25 W	0.05 Mio.			
5 A / 125 VAC resp. 3 A / 250 VAC, IP40	Ag	max. 125 / 250 VAC	max. 5 / 3 A	750 W	0.2 Mio.	< 30 mΩ	> 100 MΩ	< 5 ms
6 A, IP67		max. 250 VAC	max. 5 A	1250 W	0.01 Mio.			
10 A, IP40	Ag	max. 250 VAC	max. 10 A	2500 W	0.05 Mio.	< 30 mΩ	> 100 MΩ	< 5 ms
10 A, IP67		max. 250 VAC	max. 10 A	2500 W	0.01 Mio.			

Marking

The three digits are part of the ordner number key	
000	No Lettering
001-100	Standard Lettering
101-	Customized Lettering

Order Index Lettering

Laser Marking			
001 =**A**	021 =**U**	041 =÷	061 =**EIN**
002 =**B**	022 =**V**	042 = ✳	062 =**AUS**
003 =**C**	023 =**W**	043 =**=**	063 =**AUF**
004 =**D**	024 =**X**	044 = #	064 =**AB**
005 =**E**	025 =**Y**	045 = ↔	065 =**ON**
006 =**F**	026 =**Z**	046 = ↕	066 =**OFF**
007 =**G**	027 =**0**	047 = →	067 =**UP**
008 =**H**	028 =**1**	048 = ←	068 =**DOWN**
009 =**I**	029 =**2**	049 = ↓	069 =**HIGH**
010 =**J**	030 =**3**	050 = ↑	070 =**LOW**
011 =**K**	031 =**4**	051 = %	071 =**ON/OFF**
012 =**L**	032 =**5**	052 = √	072 =**START**
013 =**M**	033 =**6**	053 =**CTRL**	073 =**RESET**
014 =**N**	034 =**7**	054 =**RETURN**	074 =
015 =**O**	035 =**8**	055 =**SHIFT**	075 =
016 =**P**	036 =**9**	056 =**LOCK**	076 =
017 =**Q**	037 =**+**	057 =**STOP**	077 =
018 =**R**	038 =**-**	058 =**ENTER**	
019 =**S**	039 =**.**	059 =**BACK**	
020 =**T**	040 = x	060 =**LINE**	
Please note that the font size depends on the number of characters			

PHOTO

Order number key

M	S	M	-	19	-	MO	NX	A10	-	B	-	A	A0	-	A	-	PI	0GN	00R	0	A0	-	S0	NC	B	-	SO	NC	NF	-	0	000	-	C
				1		2	3	4		5		6	7		8		9	10	11	12	13		14	15	16		17	18	19		20	21		22

Diameter			1
16 mm	=	16	
19 mm	=	19	
22 mm	=	22	
30 mm	=	30	

Switch type			2
Momentary	=	MO	

Switch function			3
Change over contact	=	NX (NO / NC)	

Switching current			4
100mA	=	A10	
5A	=	05A	
6A	=	06A	
10A	=	10A	

Contact configuartion			5
SPDT	=	B	
DPDT	=	D	

Contact material			6
Gold	=	A	
Silver	=	B	

Terminal switch			7
QC 2.8 x 0.5	=	A0	
Wire harness	=	F1	

Microswitch IP			8
None	=	0	
IP40	=	A	
IP67	=	B	

Illumination type			9
No illumination	=	00	
No illumination with colored ring	=	RC	
Area illumination	=	AI	
Ring illumination	=	RI	
Point illumination	=	PI	
Ring illumination (Dead Front)	=	RD	

Illumination color			10
None	=	000	
Red	=	0RD	
Green	=	0GN	
Blue	=	0BL	
Yellow	=	0YL	
White	=	0WT	
Orange	=	0OR	
Violet	=	0VT	
Multicolor	=	RGB	
Red-Green	=	0RG	
Green-Yellow	=	0GY	

Supply voltage illumination			11
5 V	=	005	
12 V	=	012	
24 V	=	024	
W/O (without) resistors	=	00R	

Illumination sub type			12
Standard	=	0	
Bright	=	1	
Scaled	=	2	
Homogen-scaled	=	4	
Homogen	=	3	
Bright-homogen-scaled	=	7	

Terminal illumination			13
None	=	00	
QC 2.8 x 0.5	=	A0	
Switch integrated	=	C0	

Housing material			14
Stainless steel	=	S0	
Aluminum	=	A0	

M	S	M	-	19	-	MO	NX	A10	-	B	-	A	A0	-	A	-	PI	0GN	00R	0	A0	-	S0	NC	B	-	SO	NC	NF	-	0	000	-	C
				1		2	3	4		5		6	7		8		9	10	11	12	13		14	15	16		17	18	19		20	21		22

Housing color			15
Neutral	=	NC	
Red	=	RD	
Green	=	GN	
Black	=	BK	

Mounting			16
None	=	0	
Thread (M) without antirotation protection	=	A	
Thread (M) with antirotation protection	=	B	
Snap 1.5 mm	=	D	
Snap 2 mm	=	E	

Actuator material			17
Ceramics	=	C0	
Stainless steel	=	S0	
Aluminum	=	A0	

Actuator color			18
White	=	WT	
Neutral	=	NC	
Red	=	RD	
Green	=	GN	
Black	=	BK	

Actuator style			19
No Finger guide	=	NF	

Lettering type			20
None	=	0	
Laser	=	1	

Marking type			21
None	=	000	

See in the table "Order Index Lettering"

Accessories			22
None	=	0	
Hex nut stainless steel with O-Ring	=	A	
Hex nut plastic with O-Ring	=	C	
Hex nut plastic with O-Ring and screw terminal	=	D	

Variants

Diameter	Switch type	Switching current	Electrical contact	IP specification backside	Illumination	Illumination color	Housing material	Order Number
16	MO	100mA	SPDT	IP40	non-illuminated	-	Stainless Steel	1241.6611.1110000
16	MO	5A	SPDT	IP40	non-illuminated	-	Stainless Steel	1241.6611.1120000
16	MO	10A	SPDT	IP40	non-illuminated	-	Stainless Steel	1241.6611.1130000
16	MO	100mA	SPDT	IP40	non-illuminated	-	Stainless Steel	1241.6612.1110074
16	MO	5A	SPDT	IP40	non-illuminated	-	Stainless Steel	1241.6612.1120000
16	MO	10A	SPDT	IP40	RI homogeneous	red	Stainless Steel	3-102-620
16	MO	100mA	SPDT	IP40	RI homogeneous	green	Stainless Steel	3-102-621
16	MO	10A	SPDT	IP40	RI homogeneous	green	Stainless Steel	3-102-623
16	MO	100mA	SPDT	IP40	RI homogeneous	blue	Stainless Steel	3-102-624
16	MO	10A	SPDT	IP40	RI homogeneous	blue	Stainless Steel	3-102-626
16	MO	100mA	SPDT	IP40	RI homogeneous	yellow	Stainless Steel	3-102-627
16	MO	10A	SPDT	IP40	RI homogeneous	yellow	Stainless Steel	3-102-629
16	MO	100mA	SPDT	IP40	RI homogeneous	white	Stainless Steel	3-102-630
16	MO	10A	SPDT	IP40	RI homogeneous	white	Stainless Steel	3-102-632
16	MO	100mA	SPDT	IP40	Area illumination	red	Stainless Steel	3-102-633
16	MO	5A	SPDT	IP40	Area illumination	red	Stainless Steel	3-102-634
16	MO	10A	SPDT	IP40	Area illumination	red	Stainless Steel	3-102-635
16	MO	100mA	SPDT	IP40	Area illumination	green	Stainless Steel	3-102-636
16	MO	5A	SPDT	IP40	Area illumination	green	Stainless Steel	3-102-637
16	MO	10A	SPDT	IP40	Area illumination	green	Stainless Steel	3-102-639
16	MO	100mA	SPDT	IP40	Area illumination	blue	Stainless Steel	3-102-640
16	MO	5A	SPDT	IP40	Area illumination	blue	Stainless Steel	3-102-641
16	MO	10A	SPDT	IP40	Area illumination	blue	Stainless Steel	3-102-642
16	MO	100mA	SPDT	IP40	Area illumination	yellow	Stainless Steel	3-102-643
16	MO	5A	SPDT	IP40	Area illumination	yellow	Stainless Steel	3-102-644
16	MO	10A	SPDT	IP40	Area illumination	yellow	Stainless Steel	3-102-645
16	MO	100mA	SPDT	IP40	Area illumination	white	Stainless Steel	3-102-646
16	MO	5A	SPDT	IP40	Area illumination	white	Stainless Steel	3-102-647
16	MO	10A	SPDT	IP40	Area illumination	white	Stainless Steel	3-102-648
16	MO	100mA	SPDT	IP40	non-illuminated	-	Stainless Steel	3-102-649
16	MO	5A	SPDT	IP40	non-illuminated	-	Stainless Steel	3-102-650
16	MO	10A	SPDT	IP40	non-illuminated	-	Stainless Steel	3-102-651
16	MO	5A	SPDT	IP40	Color ring	red	Stainless Steel	3-136-737
16	MO	5A	SPDT	IP40	Color ring	green	Stainless Steel	3-136-738
16	MO	5A	SPDT	IP40	Color ring	blue	Stainless Steel	3-136-740
16	MO	5A	SPDT	IP40	Color ring	black	Stainless Steel	3-136-741
16	MO	5A	SPDT	IP40	Ring illumination RD	white	Aluminum	3-137-051
19	MO	100mA	SPDT	IP40	non-illuminated	-	Stainless Steel	1241.6621.1110000
19	MO	5A	SPDT	IP40	non-illuminated	-	Stainless Steel	1241.6621.1120000
19	MO	10A	SPDT	IP40	non-illuminated	-	Stainless Steel	1241.6621.1130000
19	MO	6A	SPDT	IP67	non-illuminated	-	Stainless Steel	1241.6621.1180000
19	MO	5A	SPDT	IP40	non-illuminated	-	Stainless Steel	1241.6622.1120000
19	MO	5A	SPDT	IP40	non-illuminated	-	Alu red	1241.6622.3120000
19	MO	5A	SPDT	IP40	non-illuminated	-	Alu red	1241.6622.3120066

Diameter	Switch type	Switching current	Electrical contact	IP specification backside	Illumination	Illumination color	Housing material	Order Number
19	MO	5A	SPDT	IP40	non-illuminated	-	Alu green	1241.6622.5120000
19	MO	5A	SPDT	IP40	non-illuminated	-	Alu green	1241.6622.5120065
19	MO	100mA	SPDT	IP40	Point Illumination	red	Stainless Steel	1241.6623.1111000
19	MO	100mA	SPDT	IP40	Point Illumination	green	Stainless Steel	1241.6623.1112000
19	MO	5A	SPDT	IP40	Point Illumination	red	Stainless Steel	1241.6623.1121000
19	MO	5A	SPDT	IP40	Point Illumination	green	Stainless Steel	1241.6623.1122000
19	MO	5A	SPDT	IP40	Point Illumination	blue	Stainless Steel	1241.6623.1124000
19	MO	10A	SPDT	IP40	Point Illumination	red	Stainless Steel	1241.6623.1131000
19	MO	10A	SPDT	IP40	Point Illumination	green	Stainless Steel	1241.6623.1132000
19	MO	100mA	SPDT	IP40	RI dotted	red	Stainless Steel	1241.6624.1111000
19	MO	100mA	SPDT	IP40	RI dotted	red	Stainless Steel	
19	MO	100mA	SPDT	IP40	RI dotted	green	Stainless Steel	1241.6624.1112000
19	MO	100mA	SPDT	IP40	RI dotted	yellow	Stainless Steel	1241.6624.1113000
19	MO	100mA	SPDT	IP40	RI dotted	blue	Stainless Steel	1241.6624.1114000
19	MO	100mA	SPDT	IP40	RI dotted	blue	Stainless Steel	1241.6624.1114074
19	MO	5A	SPDT	IP40	RI dotted	red	Stainless Steel	1241.6624.1121000
19	MO	5A	SPDT	IP40	RI dotted	green	Stainless Steel	1241.6624.1122000
19	MO	5A	SPDT	IP40	RI dotted	blue	Stainless Steel	1241.6624.1124000
19	MO	5A	SPDT	IP40	RI dotted	white	Stainless Steel	1241.6624.1125000
19	MO	10A	SPDT	IP40	RI dotted	red	Stainless Steel	1241.6624.1131000
19	MO	10A	SPDT	IP40	RI dotted	green	Stainless Steel	1241.6624.1132000
19	MO	10A	SPDT	IP40	RI dotted	blue	Stainless Steel	1241.6624.1134000
19	MO	6A	SPDT	IP67	RI dotted	red	Stainless Steel	1241.6624.1181000
19	MO	6A	SPDT	IP67	RI dotted	green	Stainless Steel	1241.6624.1182000
19	MO	5A	DPDT	IP40	non-illuminated	-	Stainless Steel	1241.6921.1120000
19	MO	5A	DPDT	IP40	non-illuminated	-	Stainless Steel	1241.6922.1120000
19	MO	5A	DPDT	IP40	Point Illumination	red	Stainless Steel	1241.6923.1121000
19	MO	5A	DPDT	IP40	Point Illumination	green	Stainless Steel	1241.6923.1122000
19	MO	5A	DPDT	IP40	Point Illumination	blue	Stainless Steel	1241.6923.1124000
19	MO	5A	DPDT	IP40	RI dotted	red	Stainless Steel	1241.6924.1121000
19	MO	5A	DPDT	IP40	RI dotted	green	Stainless Steel	1241.6924.1122000
19	MO	5A	DPDT	IP40	RI dotted	blue	Stainless Steel	1241.6924.1124000
19	MO	5A	SPDT	IP40	non-illuminated	-	Stainless Steel	1241.7021.1120000
19	MO	6A	SPDT	IP67	non-illuminated	-	Stainless Steel	1241.7021.1180000
19	MO	100mA	SPDT	IP40	Area illumination	red	Stainless Steel	1241.8412
19	MO	100mA	SPDT	IP40	Area illumination	green	Stainless Steel	1241.8413
19	MO	100mA	SPDT	IP40	Area illumination	blue	Stainless Steel	1241.8415
19	MO	100mA	SPDT	IP40	Area illumination	white	Stainless Steel	1241.8416
19	MO	10A	SPDT	IP40	Area illumination	red	Stainless Steel	1241.8448
19	MO	10A	SPDT	IP40	Area illumination	green	Stainless Steel	1241.8449
19	MO	10A	SPDT	IP40	Area illumination	blue	Stainless Steel	1241.8451
19	MO	10A	SPDT	IP40	Area illumination	white	Stainless Steel	1241.8452
19	MO	5A	SPDT	IP40	Point Illumination	green / yellow	Stainless Steel	3-101-515
19	MO	100mA	SPDT	IP40	RI homogeneous	RGB	Stainless Steel	3-102-708
19	MO	10A	SPDT	IP40	RI homogeneous	RGB	Stainless Steel	3-102-772
19	MO	100mA	SPDT	IP40	Area illumination	RGB	Stainless Steel	3-102-788
19	MO	5A	SPDT	IP40	Area illumination	RGB	Stainless Steel	3-102-789

Diameter	Switch type	Switching current	Electrical contact	IP specification backside	Illumination	Illumination color	Housing material	Order Number
19	MO	10A	SPDT	IP40	Area illumination	RGB	Stainless Steel	3-102-790
19	MO	100mA	SPDT	IP40	RI homogeneous	green	Stainless Steel	3-108-945
19	MO	5A	SPDT	IP40	RI homogeneous	green	Stainless Steel	3-108-946
19	MO	10A	SPDT	IP40	RI homogeneous	green	Stainless Steel	3-108-947
19	MO	100mA	SPDT	IP40	RI homogeneous	blue	Stainless Steel	3-108-948
19	MO	5A	SPDT	IP40	RI homogeneous	blue	Stainless Steel	3-108-949
19	MO	10A	SPDT	IP40	RI homogeneous	blue	Stainless Steel	3-108-950
19	MO	5A	DPDT	IP40	RI homogeneous	red	Stainless Steel	3-108-951
19	MO	100mA	SPDT	IP40	RI homogeneous	red	Stainless Steel	3-108-952
19	MO	5A	SPDT	IP40	RI homogeneous	red	Stainless Steel	3-108-953
19	MO	10A	SPDT	IP40	RI homogeneous	red	Stainless Steel	3-108-954
19	MO	5A	DPDT	IP40	RI homogeneous	green	Stainless Steel	3-108-962
19	MO	5A	DPDT	IP40	RI homogeneous	blue	Stainless Steel	3-108-963
19	MO	5A	SPDT	IP40	Area illumination	green	Stainless Steel	3-120-088
19	MO	5A	SPDT	IP40	Area illumination	blue	Stainless Steel	3-120-089
19	MO	5A	SPDT	IP40	Area illumination	red	Stainless Steel	3-120-103
19	MO	6A	SPDT	IP67	Area illumination	red	Stainless Steel	3-120-115
19	MO	5A	SPDT	IP40	Color ring	red	Stainless Steel	3-136-752
19	MO	5A	SPDT	IP40	Color ring	green	Stainless Steel	3-136-753
19	MO	5A	SPDT	IP40	Color ring	blue	Stainless Steel	3-136-754
19	MO	5A	SPDT	IP40	Color ring	black	Stainless Steel	3-136-755
19	MO	5A	SPDT	IP40	Ring illumination RD	white	Aluminum	3-137-082
19	MO	5A	SPDT	IP40	Ring illumination RD	RGB	Aluminum	3-137-085
22	MO	100mA	SPDT	IP40	non-illuminated	-	Stainless Steel	1241.6631.1110000
22	MO	5A	SPDT	IP40	non-illuminated	-	Stainless Steel	1241.6631.1120000
22	MO	10A	SPDT	IP40	non-illuminated	-	Stainless Steel	1241.6631.1130000
22	MO	6A	SPDT	IP67	non-illuminated	-	Stainless Steel	1241.6631.1180000
22	MO	100mA	SPDT	IP40	non-illuminated	-	Stainless Steel	1241.6632.1110000
22	MO	5A	SPDT	IP40	non-illuminated	-	Stainless Steel	1241.6632.1120000
22	MO	5A	SPDT	IP40	non-illuminated	-	Alu red	1241.6632.3120000
22	MO	5A	SPDT	IP40	non-illuminated	-	Alu red	1241.6632.3120057
22	MO	5A	SPDT	IP40	non-illuminated	-	Alu red	1241.6632.3120066
22	MO	5A	SPDT	IP40	non-illuminated	-	Alu green	1241.6632.5120000
22	MO	5A	SPDT	IP40	non-illuminated	-	Alu green	1241.6632.5120061
22	MO	5A	SPDT	IP40	non-illuminated	-	Alu green	1241.6632.5120065
22	MO	100mA	SPDT	IP40	Point Illumination	red	Stainless Steel	1241.6633.1111000
22	MO	100mA	SPDT	IP40	Point Illumination	green	Stainless Steel	1241.6633.1112000
22	MO	100mA	SPDT	IP40	Point Illumination	blue	Stainless Steel	1241.6633.1114000
22	MO	5A	SPDT	IP40	Point Illumination	red	Stainless Steel	1241.6633.1121000
22	MO	5A	SPDT	IP40	Point Illumination	green	Stainless Steel	1241.6633.1122000
22	MO	5A	SPDT	IP40	Point Illumination	blue	Stainless Steel	1241.6633.1124000
22	MO	5A	SPDT	IP40	Point Illumination	red / green	Stainless Steel	1241.6633.1126000
22	MO	10A	SPDT	IP40	Point Illumination	red	Stainless Steel	1241.6633.1131000
22	MO	10A	SPDT	IP40	Point Illumination	green	Stainless Steel	1241.6633.1132000
22	MO	10A	SPDT	IP40	Point Illumination	blue	Stainless Steel	1241.6633.1134000
22	MO	100mA	SPDT	IP40	RI dotted	red	Stainless Steel	1241.6634.1111000
22	MO	100mA	SPDT	IP40	RI dotted	green	Stainless Steel	1241.6634.1112000

Diameter	Switch type	Switching current	Electrical contact	IP specification backside	Illumination	Illumination color	Housing material	Order Number
22	MO	100mA	SPDT	IP40	RI dotted	yellow	Stainless Steel	1241.6634.1113000
22	MO	100mA	SPDT	IP40	RI dotted	blue	Stainless Steel	1241.6634.1114000
22	MO	5A	SPDT	IP40	RI dotted	red	Stainless Steel	1241.6634.1121000
22	MO	5A	SPDT	IP40	RI dotted	green	Stainless Steel	1241.6634.1122000
22	MO	5A	SPDT	IP40	RI dotted	yellow	Stainless Steel	1241.6634.1123000
22	MO	5A	SPDT	IP40	RI dotted	blue	Stainless Steel	1241.6634.1124000
22	MO	5A	SPDT	IP40	RI dotted	white	Stainless Steel	1241.6634.1125000
22	MO	10A	SPDT	IP40	RI dotted	red	Stainless Steel	1241.6634.1131000
22	MO	10A	SPDT	IP40	RI dotted	green	Stainless Steel	1241.6634.1132000
22	MO	6A	SPDT	IP67	RI dotted	red	Stainless Steel	1241.6634.1181000
22	MO	6A	SPDT	IP67	RI dotted	green	Stainless Steel	1241.6634.1182000
22	MO	6A	SPDT	IP67	RI dotted	blue	Stainless Steel	1241.6634.1184000
22	MO	5A	SPDT	IP40	Point Illumination	red	Stainless Steel	1241.6693.1121000
22	MO	5A	SPDT	IP40	Point Illumination	green	Stainless Steel	1241.6693.1122000
22	MO	5A	SPDT	IP40	non-illuminated	-	Stainless Steel	1241.6695.1120000
22	MO	5A	SPDT	IP40	non-illuminated	-	Stainless Steel	1241.6699.1120000
22	MO	5A	DPDT	IP40	non-illuminated	-	Stainless Steel	1241.6931.1120000
22	MO	5A	DPDT	IP40	non-illuminated	-	Stainless Steel	1241.6932.1120000
22	MO	5A	DPDT	IP40	Point Illumination	red	Stainless Steel	1241.6933.1121000
22	MO	5A	DPDT	IP40	Point Illumination	green	Stainless Steel	1241.6933.1122000
22	MO	5A	DPDT	IP40	Point Illumination	blue	Stainless Steel	1241.6933.1124000
22	MO	5A	DPDT	IP40	RI dotted	red	Stainless Steel	1241.6934.1121000
22	MO	5A	DPDT	IP40	RI dotted	green	Stainless Steel	1241.6934.1122000
22	MO	5A	DPDT	IP40	RI dotted	blue	Stainless Steel	1241.6934.1124000
22	MO	100mA	SPDT	IP40	non-illuminated	-	Stainless Steel	1241.7031.1110000
22	MO	5A	SPDT	IP40	non-illuminated	-	Stainless Steel	1241.7031.1120000
22	MO	10A	SPDT	IP40	non-illuminated	-	Stainless Steel	1241.7031.1130000
22	MO	5A	SPDT	IP40	non-illuminated	-	Stainless Steel	1241.7032.1120000
22	MO	100mA	SPDT	IP40	RI homogeneous	RGB	Stainless Steel	3-102-773
22	MO	100mA	SPDT	IP40	Area illumination	RGB	Stainless Steel	3-102-774
22	MO	5A	SPDT	IP40	Area illumination	RGB	Stainless Steel	3-102-775
22	MO	10A	SPDT	IP40	Area illumination	RGB	Stainless Steel	3-102-776
22	MO	10A	SPDT	IP40	RI homogeneous	RGB	Stainless Steel	3-102-784
22	MO	100mA	SPDT	IP40	RI homogeneous	red	Stainless Steel	3-108-955
22	MO	5A	SPDT	IP40	RI homogeneous	red	Stainless Steel	3-108-956
22	MO	10A	SPDT	IP40	RI homogeneous	red	Stainless Steel	3-108-957
22	MO	100mA	SPDT	IP40	RI homogeneous	green	Stainless Steel	3-108-958
22	MO	5A	SPDT	IP40	RI homogeneous	green	Stainless Steel	3-108-959
22	MO	10A	SPDT	IP40	RI homogeneous	green	Stainless Steel	3-108-960
22	MO	100mA	SPDT	IP40	RI homogeneous	blue	Stainless Steel	3-108-961
22	MO	5A	SPDT	IP40	RI homogeneous	blue	Stainless Steel	3-108-972
22	MO	10A	SPDT	IP40	RI homogeneous	blue	Stainless Steel	3-108-973
22	MO	5A	DPDT	IP40	RI homogeneous	red	Stainless Steel	3-108-974
22	MO	5A	DPDT	IP40	RI homogeneous	green	Stainless Steel	3-108-975
22	MO	5A	DPDT	IP40	RI homogeneous	blue	Stainless Steel	3-108-976
22	MO	100mA	SPDT	IP67	RI homogeneous	RGB	Stainless Steel	3-109-580
22	MO	5A	SPDT	IP40	Area illumination	blue	Stainless Steel	3-120-106

Diameter	Switch type	Switching current	Electrical contact	IP specification backside	Illumination	Illumination color	Housing material	Order Number
22	MO	5A	SPDT	IP40	Area illumination	white	Stainless Steel	3-120-107
22	MO	5A	SPDT	IP40	Area illumination	red	Stainless Steel	3-120-119
22	MO	5A	SPDT	IP40	Area illumination	green	Stainless Steel	3-120-124
22	MO	5A	SPDT	IP40	Color ring	red	Stainless Steel	3-136-756
22	MO	5A	SPDT	IP40	Color ring	green	Stainless Steel	3-136-757
22	MO	5A	SPDT	IP40	Color ring	blue	Stainless Steel	3-136-758
22	MO	5A	SPDT	IP40	Color ring	black	Stainless Steel	3-136-759
22	MO	5A	SPDT	IP40	Color ring	yellow	Stainless Steel	3-136-760
22	MO	5A	SPDT	IP40	Color ring	white	Stainless Steel	3-136-761
22	MO	5A	SPDT	IP40	Color ring	orange	Stainless Steel	3-136-762
22	MO	100mA	SPDT	IP40	Color ring	red	Stainless Steel	3-136-763
22	MO	100mA	SPDT	IP40	Color ring	green	Stainless Steel	3-136-764
22	MO	100mA	SPDT	IP40	Color ring	blue	Stainless Steel	3-136-765
22	MO	100mA	SPDT	IP40	Color ring	black	Stainless Steel	3-136-766
22	MO	100mA	SPDT	IP40	Color ring	yellow	Stainless Steel	3-136-767
22	MO	100mA	SPDT	IP40	Color ring	white	Stainless Steel	3-136-768
22	MO	100mA	SPDT	IP40	Color ring	orange	Stainless Steel	3-136-769
22	MO	5A	SPDT	IP40	Ring illumination RD	red	Aluminum	3-137-083
22	MO	5A	SPDT	IP40	Ring illumination RD	RGB	Aluminum	3-137-086
22	MO	5A	SPDT	IP40	Ring illumination RD	green	Aluminum	3-137-088
22	MO	5A	SPDT	IP40	Ring illumination RD	blue	Aluminum	3-137-089
22	MO	5A	SPDT	IP40	Ring illumination RD	yellow	Aluminum	3-137-090
22	MO	100mA	SPDT	IP40	Ring illumination RD	white	Aluminum	3-137-091
22	MO	5A	SPDT	IP40	Ring illumination RD	white	Aluminum	3-137-092
22	MO	10A	SPDT	IP40	Ring illumination RD	white	Aluminum	3-137-093
22	MO	100mA	SPDT	IP40	Ring illumination RD	RGB	Aluminum	3-137-094
22	MO	10A	SPDT	IP40	Ring illumination RD	RGB	Aluminum	3-137-095
22	MO	100mA	SPDT	IP40	Area illumination	red	Stainless Steel	1241.8484
22	MO	100mA	SPDT	IP40	Area illumination	green	Stainless Steel	1241.8485
22	MO	100mA	SPDT	IP40	Area illumination	blue	Stainless Steel	1241.8487
22	MO	100mA	SPDT	IP40	Area illumination	white	Stainless Steel	1241.8488
22	MO	10A	SPDT	IP40	Area illumination	red	Stainless Steel	1241.8520
22	MO	10A	SPDT	IP40	Area illumination	green	Stainless Steel	1241.8521
22	MO	10A	SPDT	IP40	Area illumination	blue	Stainless Steel	1241.8523
22	MO	10A	SPDT	IP40	Area illumination	white	Stainless Steel	1241.8524
24	MO	100mA	SPDT	IP40	non-illuminated	-	Stainless Steel	1241.6641.1110000
24	MO	5A	SPDT	IP40	non-illuminated	-	Stainless Steel	1241.6641.1120000
24	MO	10A	SPDT	IP40	non-illuminated	-	Stainless Steel	3-128-295
24	MO	100mA	SPDT	IP40	non-illuminated	-	Stainless Steel	3-132-395
24	MO	5A	SPDT	IP40	non-illuminated	-	Stainless Steel	3-132-396
30	MO	100mA	SPDT	IP40	non-illuminated	-	Stainless Steel	1241.6661.1110000
30	MO	5A	SPDT	IP40	non-illuminated	-	Stainless Steel	1241.6661.1120000
30	MO	10A	SPDT	IP40	non-illuminated	-	Stainless Steel	1241.6661.1130000
30	MO	100mA	SPDT	IP67	non-illuminated	-	Stainless Steel	1241.6661.1170000
30	MO	100mA	SPDT	IP40	Point Illumination	red	Stainless Steel	1241.6663.1111000
30	MO	100mA	SPDT	IP40	Point Illumination	blue	Stainless Steel	1241.6663.1114000
30	MO	5A	SPDT	IP40	Point Illumination	red	Stainless Steel	1241.6663.1121000

Diameter	Switch type	Switching current	Electrical contact	IP specification backside	Illumination	Illumination color	Housing material	Order Number
30	MO	5A	SPDT	IP40	Point Illumination	green	Stainless Steel	1241.6663.1122000
30	MO	5A	SPDT	IP40	Point Illumination	blue	Stainless Steel	1241.6663.1124000
30	MO	5A	SPDT	IP40	Point Illumination	white	Stainless Steel	1241.6663.1125000
30	MO	10A	SPDT	IP40	Point Illumination	green	Stainless Steel	1241.6663.1132000
30	MO	5A	SPDT	IP40	Point Illumination	red	Aluminum	1241.6663.3121
30	MO	100mA	SPDT	IP40	RI dotted	red	Stainless Steel	1241.6664.1111000
30	MO	100mA	SPDT	IP40	RI dotted	green	Stainless Steel	1241.6664.1112000
30	MO	100mA	SPDT	IP40	RI dotted	yellow	Stainless Steel	1241.6664.1113000
30	MO	100mA	SPDT	IP40	RI dotted	blue	Stainless Steel	1241.6664.1114000
30	MO	5A	SPDT	IP40	RI dotted	red	Stainless Steel	1241.6664.1121000
30	MO	5A	SPDT	IP40	RI dotted	green	Stainless Steel	1241.6664.1122000
30	MO	5A	SPDT	IP40	RI dotted	yellow	Stainless Steel	1241.6664.1123000
30	MO	5A	SPDT	IP40	RI dotted	blue	Stainless Steel	1241.6664.1124000
30	MO	5A	SPDT	IP40	RI dotted	white	Stainless Steel	1241.6664.1125000
30	MO	10A	SPDT	IP40	RI dotted	green	Stainless Steel	1241.6664.1132000
30	MO	10A	SPDT	IP40	RI dotted	blue	Stainless Steel	1241.6664.1134000
30	MO	5A	DPDT	IP40	non-illuminated	-	Stainless Steel	1241.6961.1120000
30	MO	5A	DPDT	IP40	non-illuminated	-	Stainless Steel	1241.6962.1120000
30	MO	5A	DPDT	IP40	Point Illumination	red	Stainless Steel	1241.6963.1121000
30	MO	5A	DPDT	IP40	Point Illumination	green	Stainless Steel	1241.6963.1122000
30	MO	5A	DPDT	IP40	Ring Illumination	red	Stainless Steel	1241.6964.1121000
30	MO	5A	DPDT	IP40	Ring Illumination	green	Stainless Steel	1241.6964.1122000
30	MO	5A	DPDT	IP40	Ring Illumination	blue	Stainless Steel	1241.6964.1124000
30	MO	100mA	SPDT	IP40	RI homogeneous	RGB	Stainless Steel	3-102-785
30	MO	10A	SPDT	IP40	RI homogeneous	RGB	Stainless Steel	3-102-787
30	MO	100mA	SPDT	IP40	RI homogeneous	red	Stainless Steel	3-108-964
30	MO	5A	SPDT	IP40	RI homogeneous	red	Stainless Steel	3-108-965
30	MO	10A	SPDT	IP40	RI homogeneous	red	Stainless Steel	3-108-966
30	MO	100mA	SPDT	IP40	RI homogeneous	green	Stainless Steel	3-108-967
30	MO	5A	SPDT	IP40	RI homogeneous	green	Stainless Steel	3-108-968
30	MO	10A	SPDT	IP40	RI homogeneous	green	Stainless Steel	3-108-969
30	MO	100mA	SPDT	IP40	RI homogeneous	blue	Stainless Steel	3-108-977
30	MO	5A	SPDT	IP40	RI homogeneous	blue	Stainless Steel	3-108-978
30	MO	10A	SPDT	IP40	RI homogeneous	blue	Stainless Steel	3-108-979
30	MO	5A	SPDT	IP40	Color ring	red	Stainless Steel	3-136-770
30	MO	5A	SPDT	IP40	Color ring	green	Stainless Steel	3-136-771
30	MO	5A	SPDT	IP40	Color ring	blue	Stainless Steel	3-136-772
30	MO	5A	SPDT	IP40	Color ring	black	Stainless Steel	3-136-773
30	MO	5A	SPDT	IP40	Ring illumination RD	white	Aluminum	3-137-084
30	MO	5A	SPDT	IP40	Ring illumination RD	RGB	Aluminum	3-137-087

Availability for all products can be searched real-time: https://www.schurter.com/en/info-center/support-tools/stock-check-distributors

Packaging unit	10 pcs.	In box or packed in air cushion bags

The nut with gasket and micro switch are enclosed in the box.

PHASE-OUT

27.02.2025

The specifications, descriptions and illustrations indicated in this document are based on current information. All content is subject to modifications and amendments. Information furnished is believed to be accurate and reliable. However, users should independently evaluate the suitability and test each product selected for their own applications.